DIMENSIONS IN MILLIMETRES

ITEM NO.	DESCRIPTION	LENGTH	QTY	MASS (kg)
1	5 THK MS PLATE		1	0
2	M10 ZP ALL THREAD	220	1	0

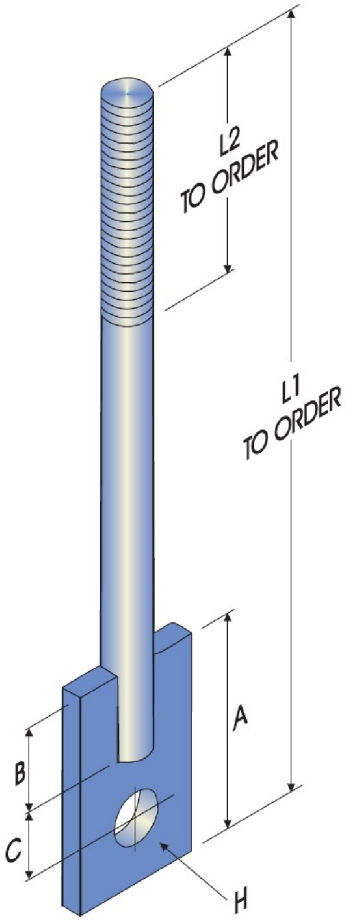

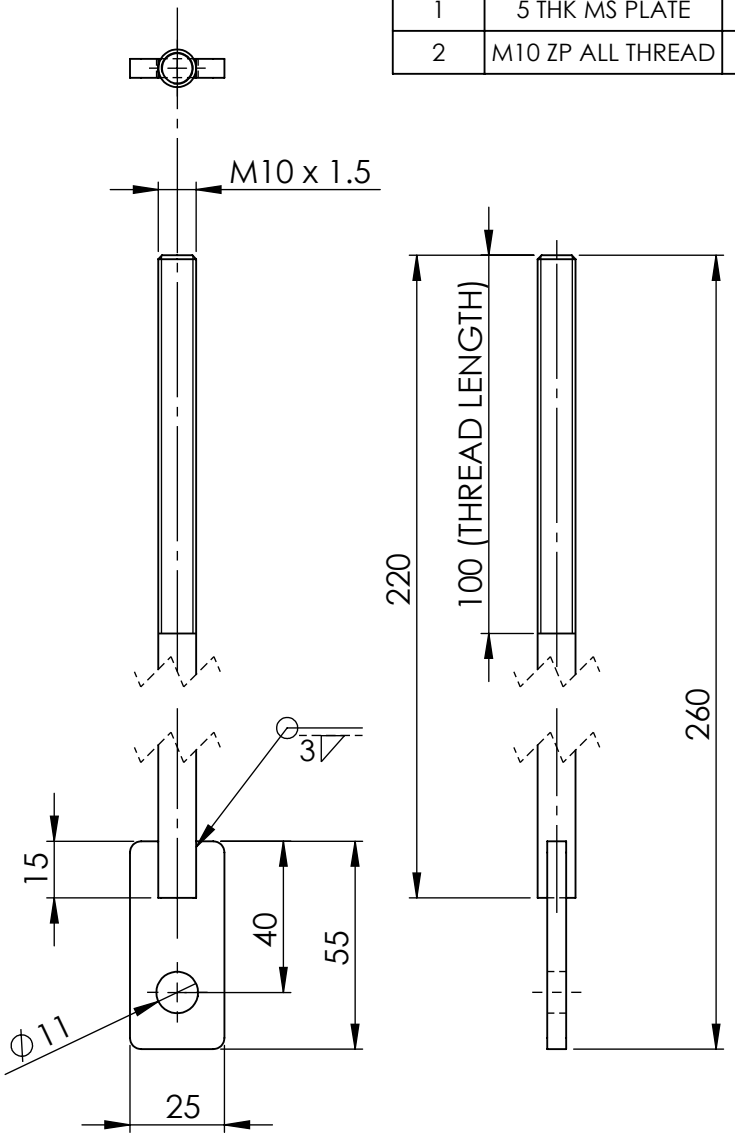

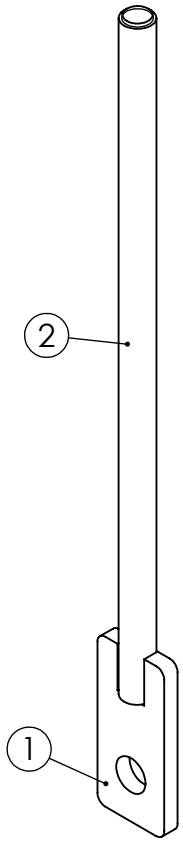

FM154 BLADE END HANGER						
PART NO	ROD DIA.	A	B	C	H	MAT.
FM154-M10	10	55	15	25	11	25 x 5
FM154-M12	12	74	22	32	14	40 x 6
FM154-M16	16	82	25	32	18	75 x 10
FM154-M20	20	97	32	35	22	90 x 12
FM154-M24	24	115	35	40	26	90 x 12

FINISH: GALVANISED OR PLAIN

UNLESS OTHERWISE SPECIFIED: TOLERANCES: MACHINE + / - 0.25mm FABRICATION + / - 1.0 mm

THIS DRAWING IS THE PROPERTY OF MECHANICAL ENGINEERING & CAD SERVICES (MECS) Pty Ltd & MUST NOT BE MANUFACTURED FROM,COPIED OR TRANSMITTED TO A THIRD PARTY WITHOUT THE PRIOR APPROVAL FROM MECHANICAL ENGINEERING & CAD SERVICES (MECS) Pty Ltd

THIRD ANGLE PROJECTION

WEIGHT: 0 Kg

MECS
Mechanical Engineering & CAD Services
11 Campbell Place WAGGA NSW 2650
Ph: - 0409 985 816
Email: nick@mecservices.com.au

TITLE: M10 BLADE END HANGER 220 LONG

DWG NO. OEM-M10-BEH-220 REV

A4

DRAWN N DE BRUYN DATE 14/07/2025 SCALE:1:2 SHEET 1 OF 2