DIMENSIONS IN MILLIMETRES

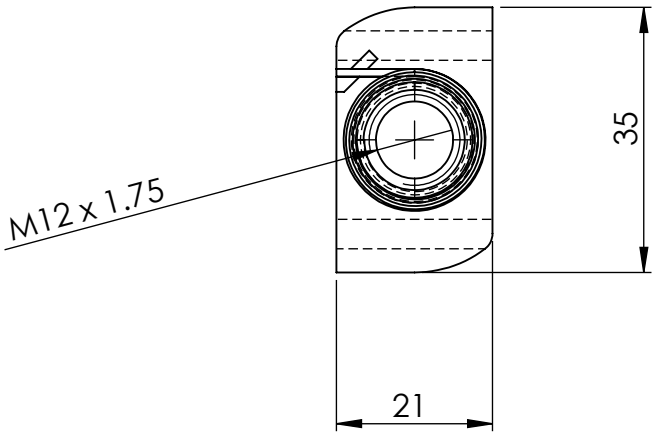

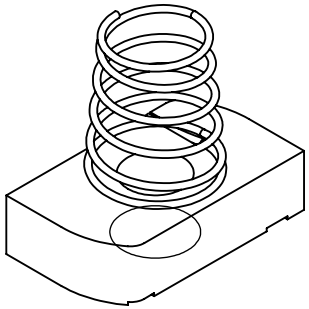

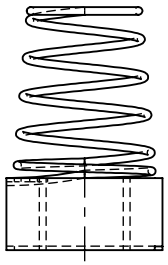

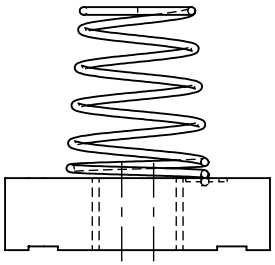

EZYSTRUT PART NUMBER - E1010S

MATERIAL:-

UNLESS OTHERWISE SPECIFIED: TOLERANCES: MACHINE + / - 0.25mm FABRICATION + / - 1.0 mm

THIS DRAWING IS THE PROPERTY OF MECHANICAL ENGINEERING & CAD SERVICES (MECS) Pty Ltd & MUST NOT BE MANUFACTURED FROM,COPIED OR TRANSMITTED TO A THIRD PARTY WITHOUT THE PRIOR APPROVAL FROM MECHANICAL ENGINEERING & CAD SERVICES (MECS) Pty Ltd

THIRD ANGLE PROJECTION

WEIGHT: Kg

MECS
Mechanical Engineering & CAD Services
11 Campbell Place WAGGA NSW 2650
Ph: - 0409 985 816
Email: nick@mecservices.com.au

TITLE:

M12x1.75 UNISTRUT NUT 304 S/S

DWG NO. OEM-M12-USN-304	REV		A4
DRAWN N DE BRUYN	DATE	SCALE:1:1	SHEET 1 OF 1