DIMENSIONS IN MILLIMETRES

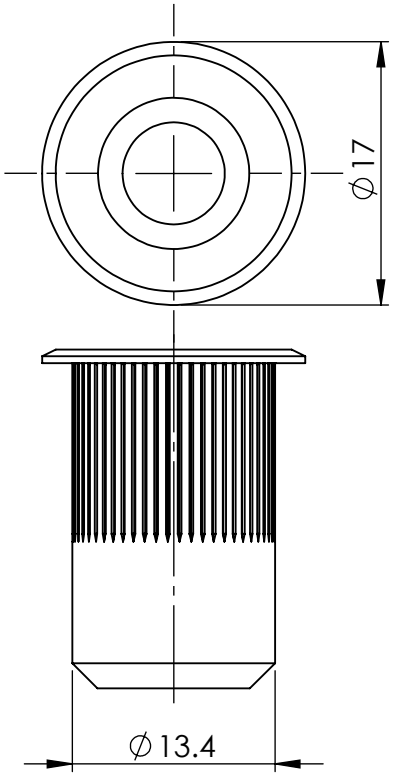

Nutserts - Zinc Plated

Nut Type: Thin Large Flange Head
Drive Type: Round Open
Thread Type: Coarse
Material: Low Carbon Steel
Material Finish: Zinc Silver Plated
Grade: Low Tensile Class 4.6
Standard: AISI 1010 1008

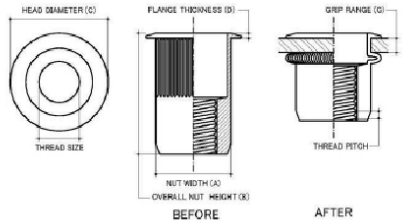

Size	Thread Pitch (mm)		Material Grip Range (G) (mm)		Recommended Hole Size (mm)	Nut Width (A) (mm)	Overall Nut Height (B) (mm)	Head Diameter (C) (mm)	Flange Thickness (D) (mm)	sku (qfind)
			Min	Max		Nom	Nom	Nom	Nom	
M4	0.70	Coarse	0.500	2.000	6.80	6.73	11.50	9.90	0.76	43AL4SP
M4	0.70	Coarse	2.000	3.300	6.80	6.73	12.70	9.90	0.76	43AL4SP2
M5	0.80	Coarse	0.500	3.300	7.60	7.50	12.90	10.50	0.76	43AL5SP
M5	0.80	Coarse	3.300	5.700	7.60	7.52	15.50	10.50	0.76	43AL5SP2
M6	1.00	Coarse	0.700	4.200	10.00	9.91	15.50	12.70	0.76	43AL6SP
M6	1.00	Coarse	4.200	6.600	10.00	9.90	18.00	12.70	0.76	43AL6SP2
M8	1.25	Coarse	0.700	3.800	13.50	13.40	18.40	17.40	0.89	43AL8SP
M8	1.25	Coarse	3.800	7.900	13.50	13.40	21.50	17.40	0.89	43AL8SP2
M10	1.50	Coarse	0.700	3.800	13.50	13.40	18.40	17.40	0.89	43AL10SP
M10	1.50	Coarse	3.800	7.900	13.50	13.46	21.20	17.40	0.89	43AL10SP2
M12	1.75	Coarse	1.600	5.100	17.45	17.40	30.40	22.00	1.19	43AL12SP
M12	1.75	Coarse	5.100	8.900	17.45	17.40	34.20	22.00	1.19	43AL12SP2
M12	1.75	Coarse	8.900	12.700	17.45	17.40	38.00	22.00	1.20	43AL12SP3

BOLT & NUT AUSTRALIA

MATERIAL:- MILD STEEL

UNLESS OTHERWISE SPECIFIED: TOLERANCES: MACHINE + / - 0.25mm FABRICATION + / - 1.0 mm

THIS DRAWING IS THE PROPERTY OF MECHANICAL ENGINEERING & CAD SERVICES (MECS) Pty Ltd & MUST NOT BE MANUFACTURED FROM,COPIED OR TRANSMITTED TO A THIRD PARTY WITHOUT THE PRIOR APPROVAL FROM MECHANICALENGINEERING & CAD SERVICES (MECS) Pty Ltd

THIRD ANGLE PROJECTION

WEIGHT: 0.01 kg

MECS
Mechanical Engineering & CAD Services
11 Campbell Place WAGGA NSW 2650
Ph: - 0409 985 816
Email: nick@mecservices.com.au

TITLE: M8x1.25 NUTSERT LARGE FLANGE HEAD 0.7-3.8mm GRIP

DWG NO. OEM-M8-NS-HD

A4

DRAWN DATE SCALE:2:1 SHEET 1 OF 1