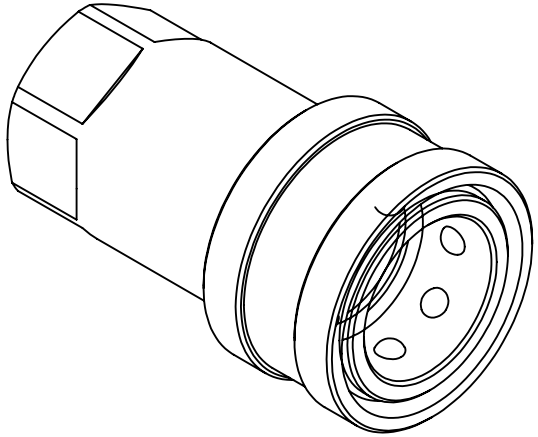

Faster

ANV - Standard Coupling Poppet Valve

SKU: ANV

Coupling: A Series Standard. Interchangeable to ISO 7241-1: Features: Connection by pulling back the sleeve. Disconnection by pulling back the female sleeve. Shut off by poppet valve. Connection under pressure not allowed. Disconnection under pressure not allowed. Interchangeability according to ISO 7241-1 part A.

UOM: pcs

Part Options *

Please select

MATERIAL:- MILD STEEL

UNLESS OTHERWISE SPECIFIED: TOLERANCES: MACHINE + / - 0.25mm FABRICATION + / - 1.0 mm

DIMENSIONS IN MILLIMETRES

THIS DRAWING IS THE PROPERTY OF MECHANICAL ENGINEERING & CAD SERVICES (MECS) Pty Ltd & MUST NOT BE MANUFACTURED FROM,COPIED OR TRANSMITTED TO A THIRD PARTY WITHOUT THE PRIOR APPROVAL FROM MECHANICAL ENGINEERING & CAD SERVICES (MECS) Pty Ltd

MECS
Mechanical Engineering & CAD Services
11 Campbell Place WAGGA NSW 2650
Ph: - 0409 985 816
Email: nick@mecservices.com.au

THIRD ANGLE PROJECTION

WEIGHT: 0.3 kg

CLIENT

RODDY ENGINEERING
14 Waratah St TUMUT NSW 2720
Ph: - 02 6947 4039
Email: roddyeng.com.au

TITLE: QUICK REALEASE COUPLING FEMALE x 1/2" BSPP FEMALE

DWG NO. OEM-QR-15NB-F		REV	A4
DRAWN N DE BRUYN	DATE 14/04/2024	SCALE:1:1	SHEET 1 OF 1