DIMENSIONS IN MILLIMETRES

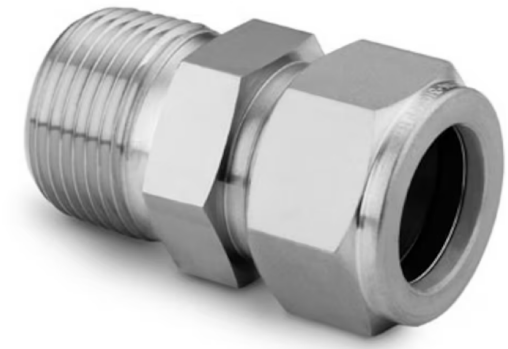

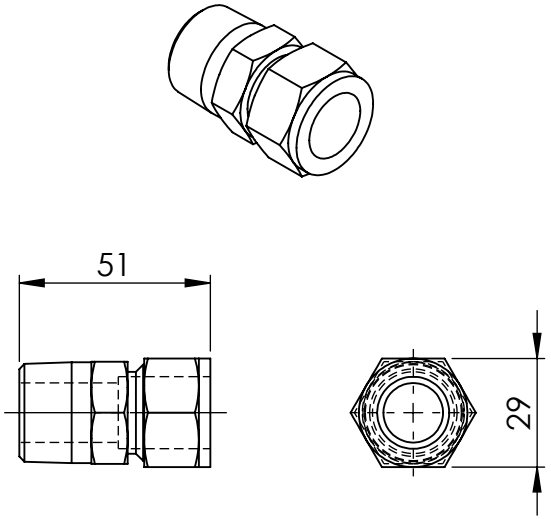

Stainless Steel Swagelok Tube Fitting, Male Connector, 3/4 in. Tube OD x 3/4 in. Male ISO Tapered Thread

Part #: SS-1210-1-12RT

https://products.swagelok.com/en/c/straights/p/SS-1210-1-12RT

MATERIAL:- 316 STAINLESS STEEL

UNLESS OTHERWISE SPECIFIED: TOLERANCES: MACHINE + / - 0.25mm FABRICATION + / - 1.0 mm

THIS DRAWING IS THE PROPERTY OF MECHANICAL ENGINEERING & CAD SERVICES (MECS) Pty Ltd & MUST NOT BE MANUFACTURED FROM,COPIED OR TRANSMITTED TO A THIRD PARTY WITHOUT THE PRIOR APPROVAL FROM MECHANICAL ENGINEERING & CAD SERVICES (MECS) Pty Ltd

THIRD ANGLE PROJECTION

WEIGHT: 0 Kg

MECS
Mechanical Engineering & CAD Services
11 Campbell Place WAGGA NSW 2650
Ph: - 0409 985 816
Email: nick@mecservices.com.au

TITLE: SWAGELOK S/S MALE CONNECTOR 3/4 BSPT x 3/4 TUBE

DWG NO. OEM-SS-1210-1-12RT REV

A4

DRAWN N DE BRUYN DATE 5/01/2026 SCALE:1:2 SHEET 1 OF 1