DIMENSIONS IN MILLIMETRES

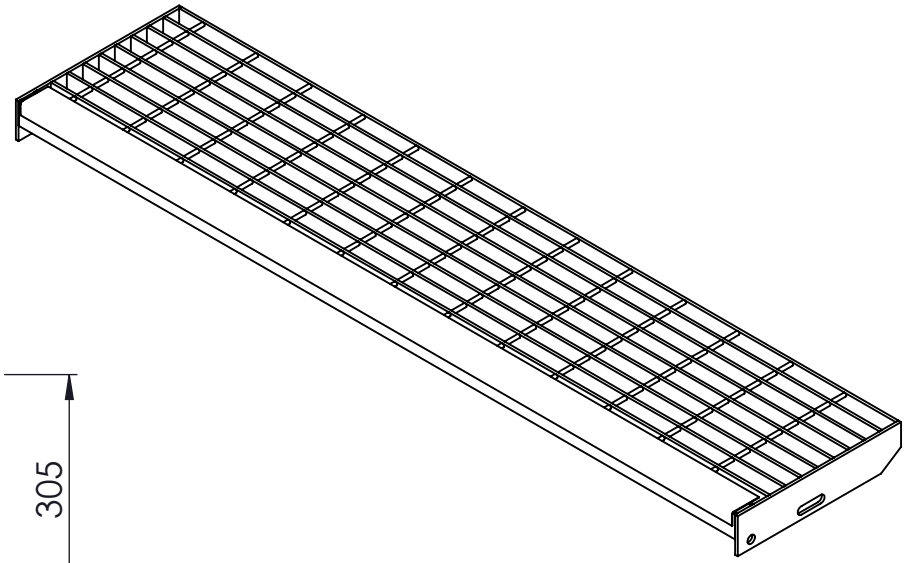

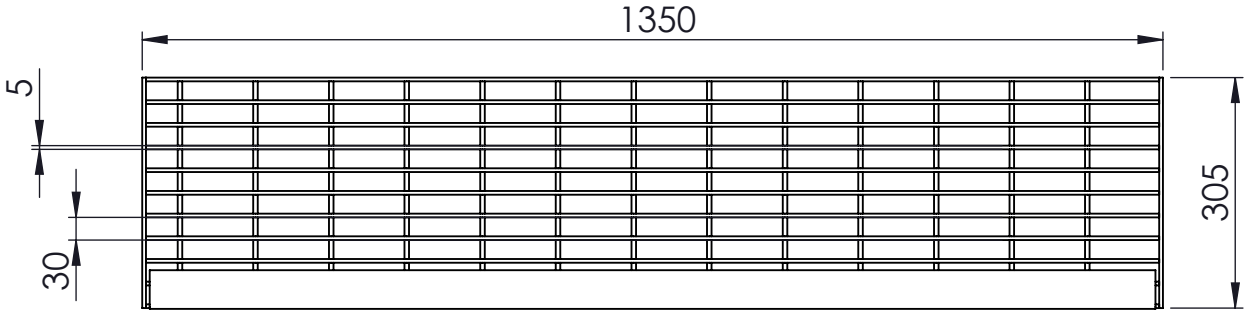


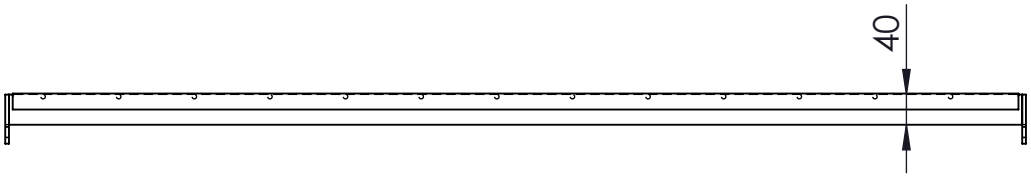


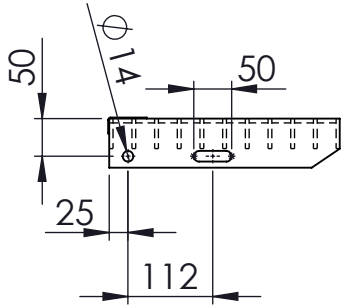


UNLESS OTHERWISE SPECIFIED: TOLERANCES: MACHINE + / - 0.25mm FABRICATION + / - 1.0 mm

THIS DRAWING IS THE PROPERTY OF MECHANICAL ENGINEERING & CAD SERVICES (MECS) Pty Ltd & MUST NOT BE MANUFACTURED FROM,COPIED OR TRANSMITTED TO A THIRD PARTY WITHOUT THE PRIOR APPROVAL FROM MECHANICALENGINEERING & CAD SERVICES (MECS) Pty Ltd

THIRD ANGLE PROJECTION

WEIGHT: 26.3 kg

MECS
Mechanical Engineering & CAD Services
11 Campbell Place WAGGA NSW 2650
Ph: - 0409 985 816
Email: mecs1@bigpond.com

TITLE: T6 SERIES 30 STAIR TREAD 1350x305

DWG NO. OEM-T6-1350x305 | A4

DRAWN N DE BRUYN | DATE 6/11/2025 | SCALE:1:10 | SHEET 1 OF 1