REVISIONS			
REV.	DESCRIPTION	DATE	APPROVED
A	SLOTS ADDED	5/03/2024	MS

ITEM NO.	DESCRIPTION	LENGTH	MATERIAL	MASS (kg)
1	76.1x4.5 CHS	118	AS 1163-350	0.8

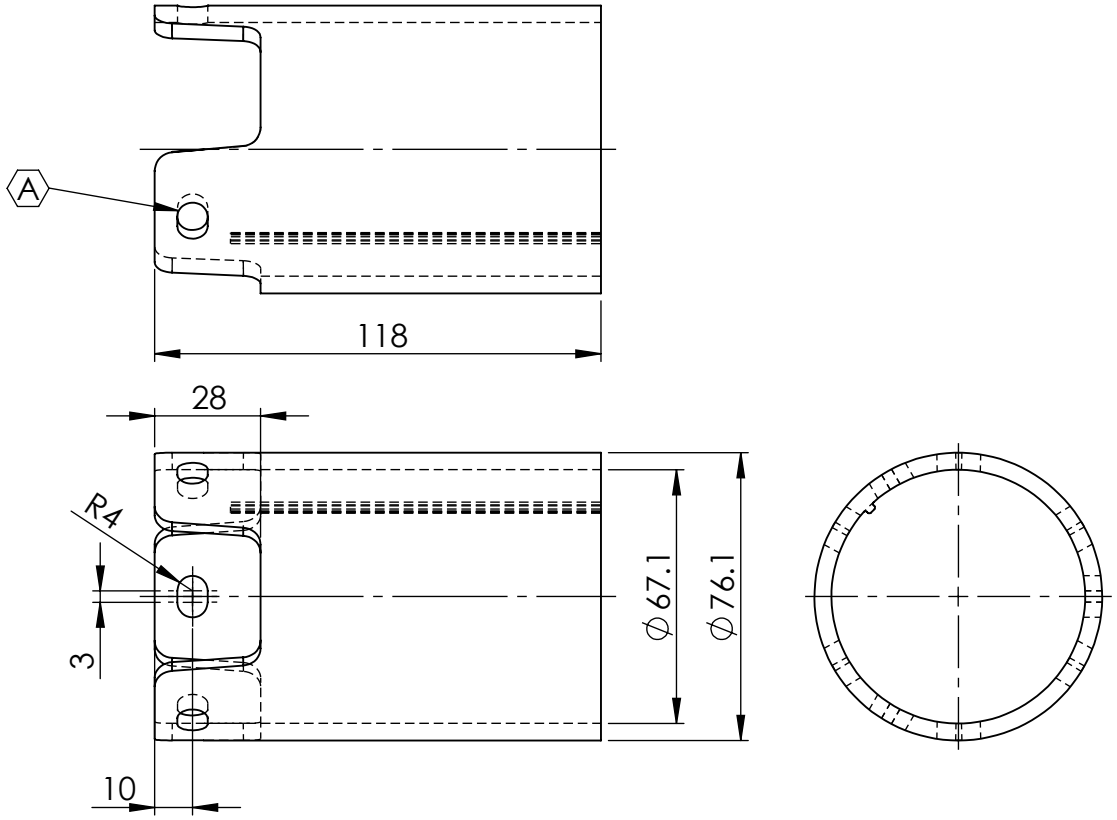

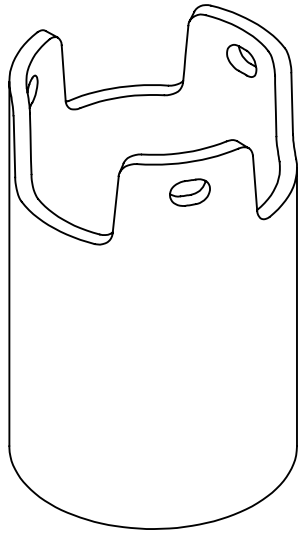

MATERIAL:- MILD STEEL

UNLESS OTHERWISE SPECIFIED: TOLERANCES: MACHINE + / - 0.25mm FABRICATION + / - 1.0 mm

DIMENSIONS IN MILLIMETRES

THIS DRAWING IS THE PROPERTY OF MECHANICAL ENGINEERING & CAD SERVICES (MECS) Pty Ltd & MUST NOT BE MANUFACTURED FROM,COPIED OR TRANSMITTED TO A THIRD PARTY WITHOUT THE PRIOR APPROVAL FROM MECHANICALENGINEERING & CAD SERVICES (MECS) Pty Ltd

MECS
Mechanical Engineering & CAD Services
11 Campbell Place WAGGA NSW 2650
Ph: - 0409 985 816
Email: nick@mecservices.com.au

THIRD ANGLE PROJECTION

WEIGHT: 0.8 kg

CLIENT

SME MOWERS
1 Hartog Place WAGGA WAGGA NSW 2650
Ph: - 02 6923 0000
Email: mstead@smemowers.com.au

TITLE: FIXED WHEEL AXLE

DWG NO. RDW-20-11A REV A A4

DRAWN N DE BRUYN DATE 2/01/2024 SCALE:1:2 SHEET 1 OF 1