| REVISIONS | | | |
|---|---|---|---|
| ZONE | REV. | DESCRIPTION | DATE |
| | A | FOR QUOTATION | 7/4/2024 |
| D1, E4 | B | ADJUSTED PER CELL PROTOTYPE SOURCED PANELS | 7/27/2024 |
| D4, D7, F4 | C | ADDED LOW AND HIGH DENSITIVY VARIANTS WITH PART NUMBER CHANGE | 9/14/2024 |

**Coolroom Panels Zlock Sandwich AU Standard Fire Rated 50mm**

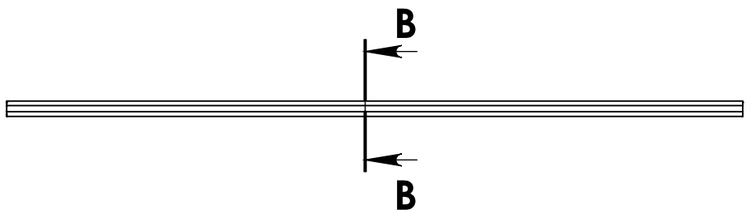


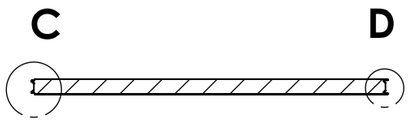


**SECTION B-B**

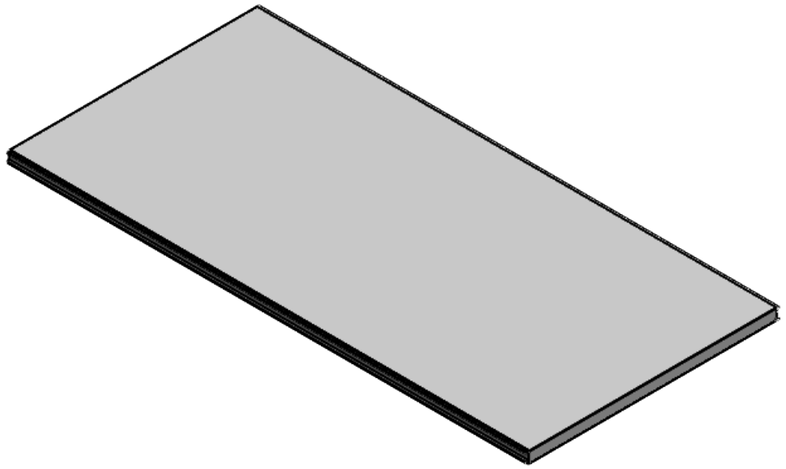

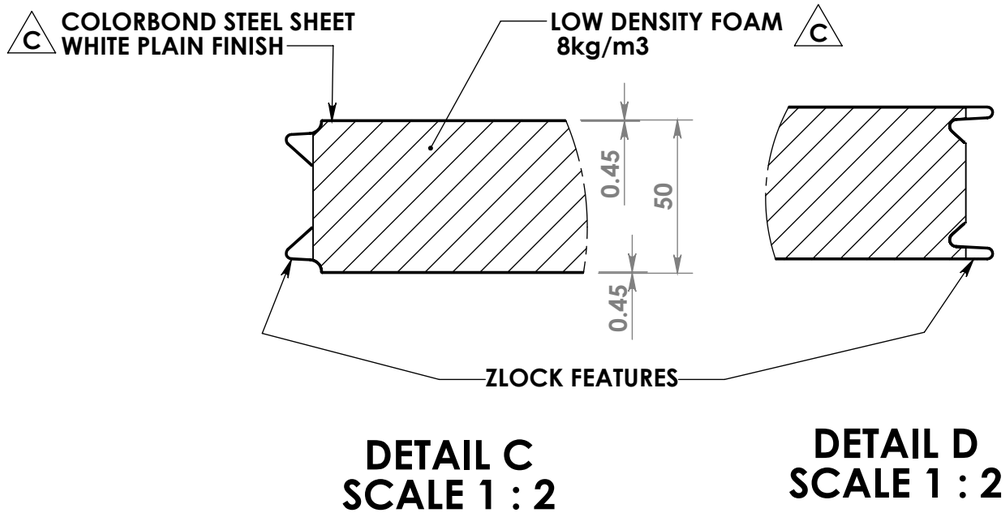


C

| | | | | | |
|---|---|---|---|---|---|
| PART No: | TMP-0010-L | REV: C | MASS | 21.4 kg | THIRD ANGLE PROJECTION |
| DESCRIPTION: | LOW DENSITY SANDWICH PANEL | | PROCESS 1 | PURCHASE | |
| MATERIAL: | PLAIN CARBON STEEL | | PROCESS 2 | | UNLESS OTHERWISE SPECIFIED: MACHINING ± 0.25 mm FABRICATION ±1.0 mm DIMENSIONS ARE IN MILLIMETERS |
| FINISH: | N/A - WHITE | | PROCESS 3 | | |

DO NOT SCALE DRAWING | Units: mm,Kg,deg

TinyMRP
www.tinymrp.com

SIZE: A3 | SHEET SCALE: 1:20 | 1 of 1