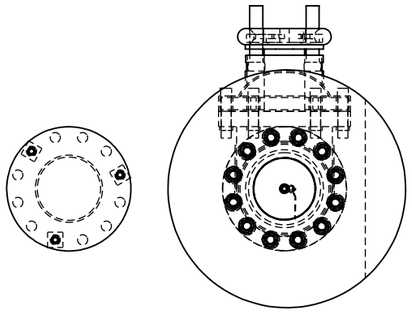

| ITEM | DRAWING No | DESCRIPTION | QTY. | WEIGHT |
|---|---|---|---|---|
| 1 | OEM-MY- 22x57 | 1 1/"8" MYLAR INSULATION SLEEVE 57 LONG | 12 | 0.00 |
| 2 | OEM-2450-SHL | 200NB GATE VALVE | 1 | 0.0 |
| 3 | OEM-200-JIS40K-3 | 200NB JIS40K 3.0 mm C-4430 GASKET | 2 | 0.4 |
| 4 | J004232-107 | 200NB JIS 40K BLIND FLANGE MS THIN | 1 | 6.00 |
| 5 | J004232-105 | 200NB JIS40K BLANKING TEST FLANGE | 1 | |
| 6 | 1-18_UNC-AT-135 | 1 1/8" UNC ALL THREAD Gr 8 x 135 LONG | 12 | 0.67 |
| 7 | | 1 1/8" FLAT G10 EXPOY WASHER | 12 | 0.01 |
| 8 | | 1 1/8" FLAT WASHER HIGH TENSILE ZP (57x32x4) | 12 | 0.05 |
| 9 | | 1 1/8" UNC HEX NUT ZP | 12 | 0.2 |
| 10 | | M16 SQUARE GAL WASHER | 3 | |
| 11 | | M16x2.0 HEX ZP NUT | 3 | |
| 12 | | M16x2.0 x 50 HEX ZP BOLT Gr 8.8 | 3 | 0.1 |
| 13 | | M30 FLAT WASHER 304 S/S (56x33x3) | 24 | |
| 14 | | M30x3.5 HEX NUT 304 S/S | 12 | |
| 15 | | M30x3.5 x 150 HEX BOLT 304 S/S | 12 | |

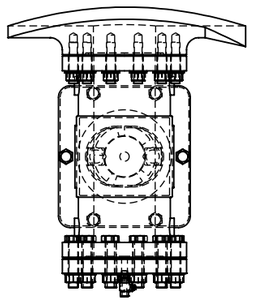

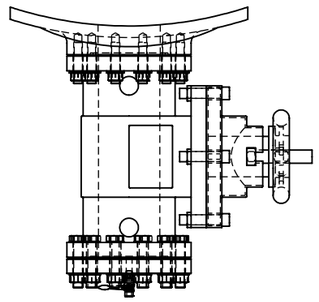

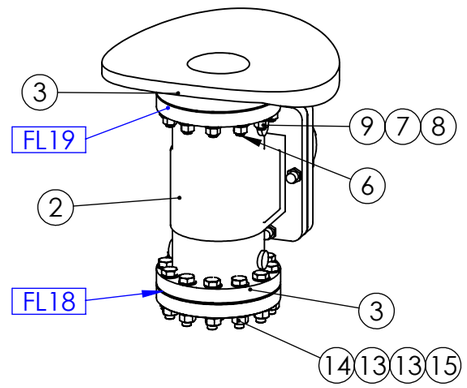


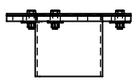

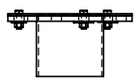

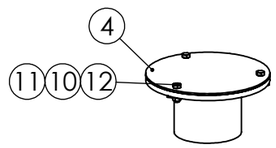


UNLESS OTHERWISE SPECIFIED: TOLERANCES: MACHINE + / - 0.25mm FABRICATION + / - 1.0 mm

DIMENSIONS IN MILLIMETRES

THIS DRAWING IS THE PROPERTY OF MECHANICAL ENGINEERING & CAD SERVICES (MECS) Pty Ltd & MUST NOT BE MANUFACTURED FROM,COPIED OR TRANSMITTED TO A THIRD PARTY WITHOUT THE PRIOR APPROVAL FROM MECHANICAL ENGINEERING & CAD SERVICES (MECS) Pty Ltd

MECS
Mechanical Engineering & CAD Services
11 Campbell Place WAGGA NSW 2650
Ph: - 0409 985 816
Email: nick@mecservices.com.au

THIRD ANGLE PROJECTION

CLIENT

RODDY ENGINEERING
14 Waratah St TUMUT NSW 2720
Ph: - 02 6947 4039
Email: roddyeng.com.au

TITLE: VALVES 2450 DEWATERING PENSTOCK

DWG NO. 13-2450-DW | REV | A3

DRAWN N DE BRUYN | DATE 2/10/2025 | SCALE:1:20 | SHEET 1 OF 1