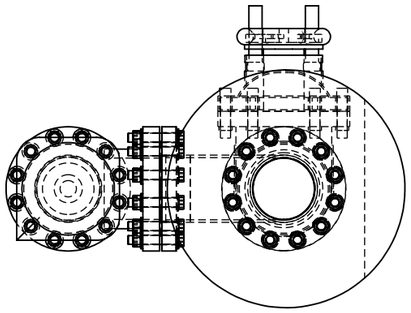

ITEM	DRAWING No	DESCRIPTION	QTY.	WEIGHT
1	OEM-MY- 22x120	1 1/8" DIA MYLAR INSULATION SLEEVE 120 LONG	12	0.01
2	OEM-MY- 22x57	1 1/"8" MYLAR INSULATION SLEEVE 57 LONG	12	0.00
3	OEM-2451-SHL	VALVE 2451 - 200NB GLOBE	1	0.00
4	OEM-2450-SHL	200NB GATE VALVE	1	0.0
5	OEM-200-JIS40K-15	200NB JIS40K 1.5mm C-4400 GASKET	2	0
6	OEM-200-JIS40K-3	200NB JIS40K 3.0 mm C-4430 GASKET	2	0.4
7	14-2450-1	PIPE BETWEEN VALVLE 2450 & 2451	1	
8	1-18_UNC-AT-135	1 1/8" UNC ALL THREAD Gr 8 x 135 LONG	12	0.67
9		1 1/8" FLAT G10 EXPOY WASHER	36	0.01
10		1 1/8" FLAT WASHER HIGH TENSILE ZP (57x32x4)	60	0.05
11		1 1/8" UNC HEX NUT ZP	36	0.2
12		1 1/8" UNC x 4 1/2" HEX BOLT Gr 8 ZP	12	0.8
13		1 1/8" UNC x 6 1/2" HEX BOLT Gr 8 ZP	12	1.0
14		M30x3.5 HEX NUT 304 S/S	12	
15		M30 FLAT WASHER 304 S/S (56x33x3)	24	
16		M30x3.5 x 150 HEX BOLT 304 S/S	12	

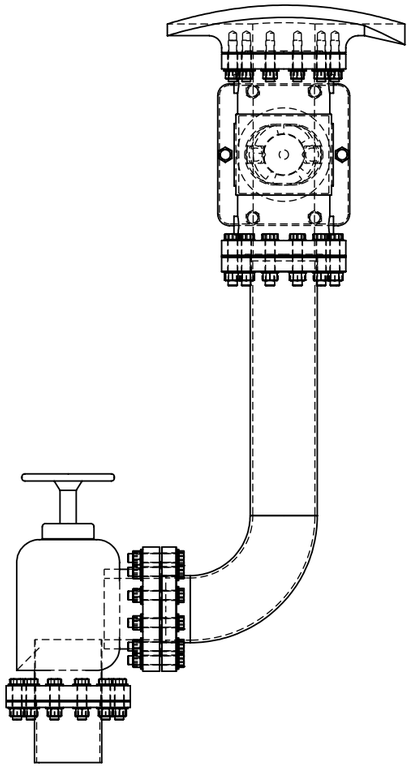

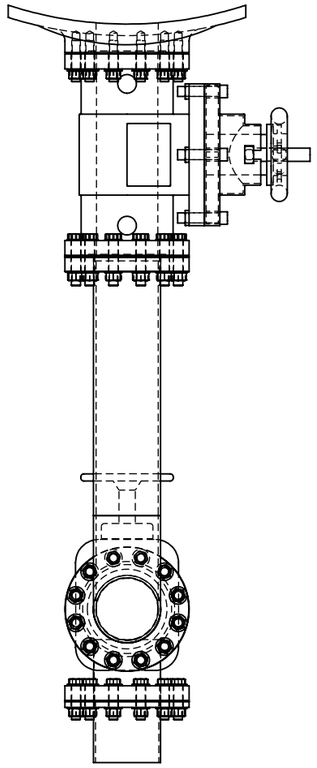

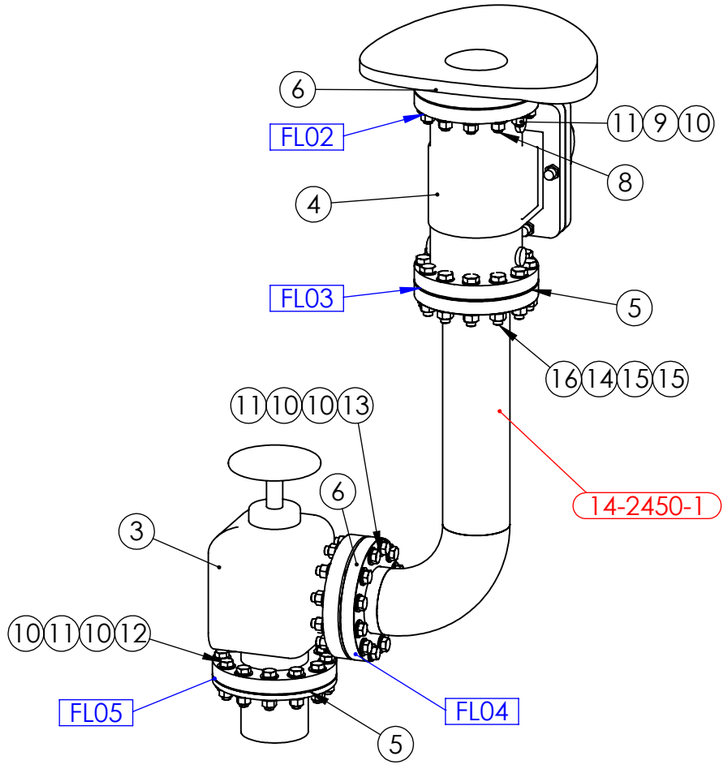

			UNLESS OTHERWISE SPECIFIED: TOLERANCES: MACHINE + / - 0.25mm FABRICATION + / - 1.0 mm	DRAWN N DE BRUYN 8/08/2025	DRAWING CHECKED
			THIS DRG SUPPLIED BY RODDY ENGINEERING 14 Waratah St, TUMUT NSW 2720 Ph: 02 6947 4039	DESIGNED	DESIGN CHECKED
				SCALE 1:20 WORK ORDER No	APPROVED
REV	NAME & DATE	DESCRIPTION	DRAWING No. 14-2450	REV:	SECTION No/KKS

snowyhydro LIMITED

M2 POWER STATION
UNIT 14
VALVES 2450 & 2451

A3 SHEET SIZE

SMA-DRG-NO

REV

SHEET 1 OF 1

0,0