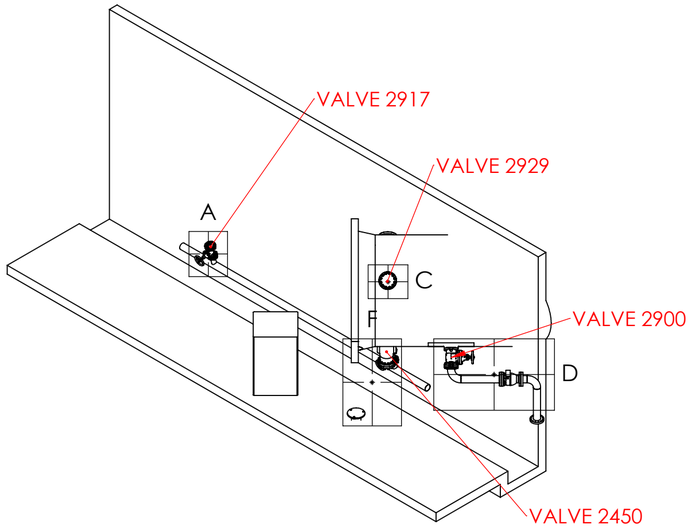

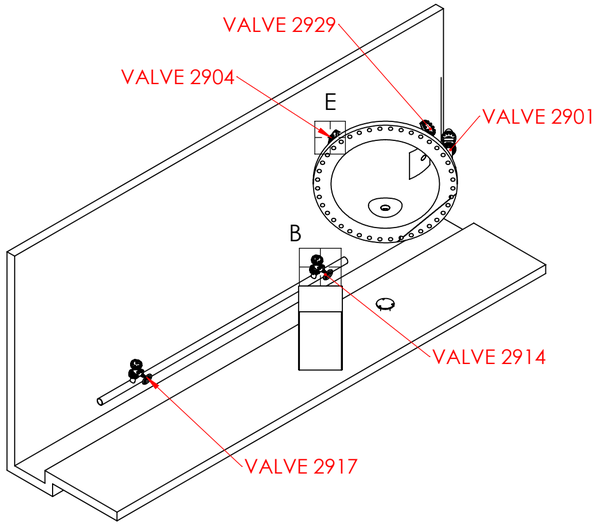

ITEM	DRAWING No	DESCRIPTION	QTY.	MASS (kg)
1	OEM-2917-SHL	100NB VALVE 2917	1	0.00
2	OEM-2914-SHL-A	100NB VALVE 2914	1	0.00
3	OEM-443-N-70	ORING SIZE 443 NITRILE SHORE 70	2	0.03
4	OEM-200-JIS40K-3	200NB JIS40K 3.0 mm C-4430 GASKET	1	0.4
5	OEM-100-JIS30K-3	100NB JIS30K 3.0mm C-4430 GASKET	2	0
6	OEM-100-300-15	100NB 300 LB 1.5mm C-4400 GASKET	2	0
7	OEM-40NB-300-3	40NB 300 Lb 3.0 mm C-4430 GASKET	1	0.0
8	OEM-40-300-B-MS	40NB ANSI 300 LB BLIND FLANGE MS	1	2.6
9	J004232-106	200NB JIS 40K BLIND FLANGE MS WITH LIFTING POINTS	1	45.35
10	J004232-104	100NB ANSI 300 Lb BLANKING TEST FLANGE	2	11.01
11	13-2450-DW	VALVES 2450 DEWATERING PENSTOCK	1	100.09
12	3-4_UNC-AT-80	3/4" UNC ALL THREAD GRADE 8- 80 LONG	4	0.18
13	1-18_UNC-AT-135	1 1/8" UNC ALL THREAD Gr 8 x 135 LONG	12	0.67
14		1 1/8" FLAT WASHER HIGH TENSILE ZP (57x32x4)	12	0.05
15		1 1/8" UNC HEX NUT ZP	12	0.2
16		3/4" FLAT WASHER HIGH TENSILE ZP (37x21x4)	4	
17		3/4" UNC HEX NUT ZINC PLATED	4	0.1
18		20 DIA MYLAR INSULATION SLEEVE 74 LONG	16	0.00
19		M20 FLAT WASHER 304 S/S (37x22x2)	81	
20		M20 G10 EXPOY FLAT WASHER	32	
21		M20 THICK FLAT WASHER 304 S/S (37x22x3)	25	
22		M20x2.5 HEX NUT 304 S/S	56	
23		M20x2.5 x 100 HEX BOLT 304 S/S	16	0.3
24		M20x2.5 x 110 HEX BOLT 304 S/S	40	0.4

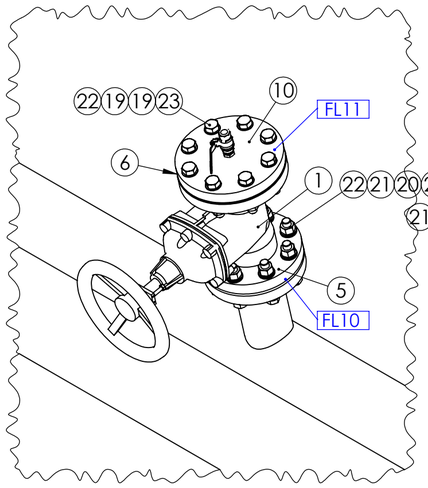

DETAIL A
SCALE 1 : 10

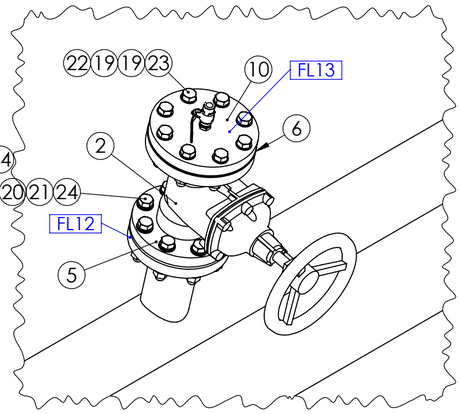

DETAIL B
SCALE 1 : 10

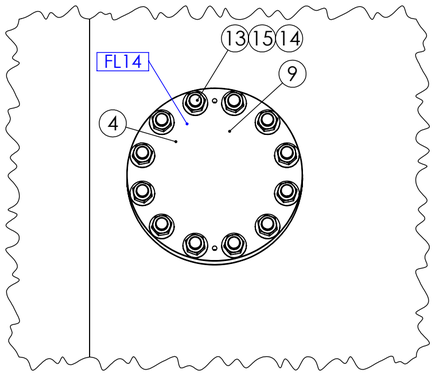

DETAIL C
SCALE 1 : 10

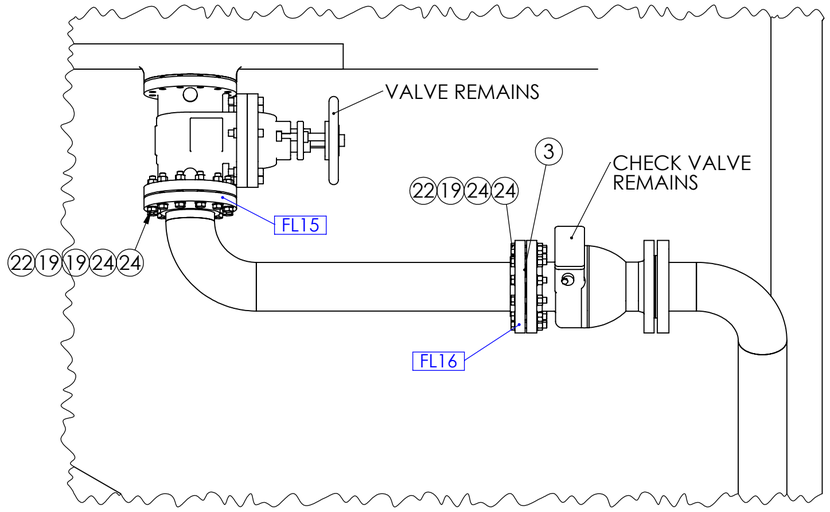

DETAIL D
SCALE 1 : 15

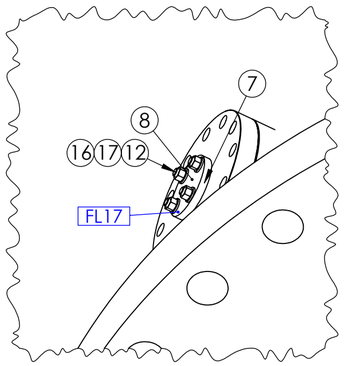

DETAIL E
SCALE 1 : 10

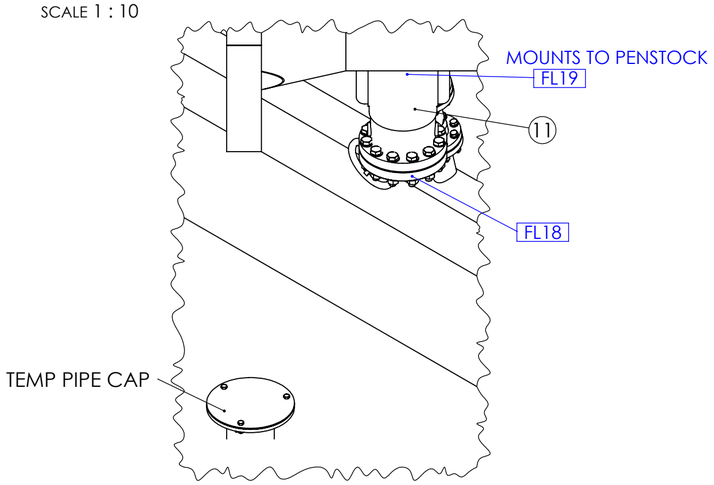

DETAIL F
SCALE 1 : 20

UNLESS OTHERWISE SPECIFIED: TOLERANCES: MACHINE + / - 0.25mm FABRICATION + / - 1.0 mm

DIMENSIONS IN MILLIMETRES

THIS DRAWING IS THE PROPERTY OF MECHANICAL ENGINEERING & CAD SERVICES (MECS) Pty Ltd & MUST NOT BE MANUFACTURED FROM,COPIED OR TRANSMITTED TO A THIRD PARTY WITHOUT THE PRIOR APPROVAL FROM MECHANICAL ENGINEERING & CAD SERVICES (MECS) Pty Ltd

MECS
Mechanical Engineering & CAD Services
11 Campbell Place WAGGA NSW 2650
Ph: - 0409 985 816
Email: nick@mecservices.com.au

THIRD ANGLE PROJECTION

CLIENT
RODDY ENGINEERING
14 Waratah St TUMUT NSW 2720
Ph: - 02 6947 4039
Email: roddyeng.com.au

TITLE: UNIT 13 BUS & PENSTOCK ISOLATING FLANGES

DWG NO. 3974-13-DW REV A2

DRAWN N DE BRUYN DATE 20/09/2025 SCALE:1:100 SHEET 1 OF 1