ITEM NO.	MATERIAL	METAL THICKNESS	MASS (kg)
1	304 STAINLESS STEEL	6	0.4

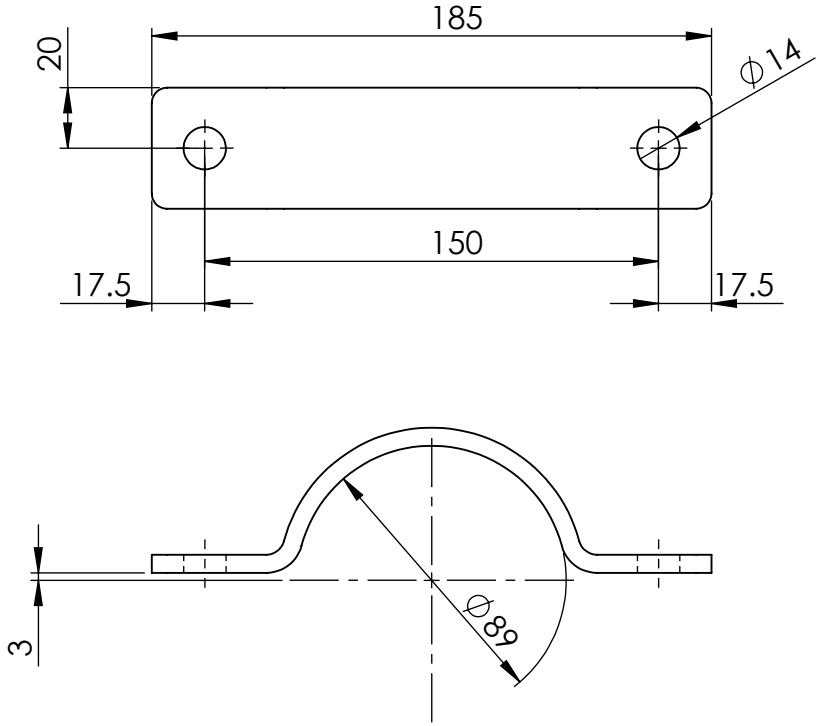

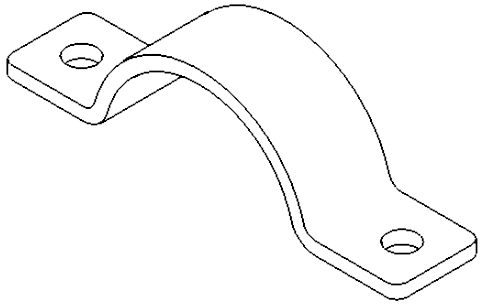

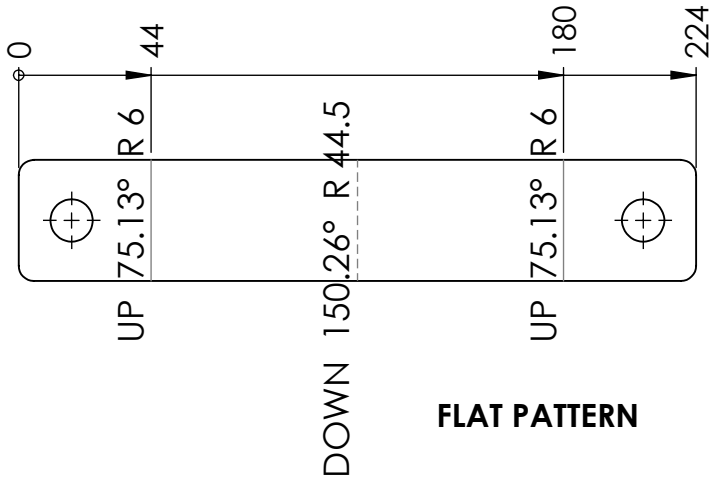

FLAT PATTERN

UNLESS OTHERWISE SPECIFIED: TOLERANCES: MACHINE + / - 0.25mm FABRICATION + / - 1.0 mm

DIMENSIONS IN MILLIMETRES

THIS DRAWING IS THE PROPERTY OF MECHANICAL ENGINEERING & CAD SERVICES (MECS) Pty Ltd & MUST NOT BE MANUFACTURED FROM,COPIED OR TRANSMITTED TO A THIRD PARTY WITHOUT THE PRIOR APPROVAL FROM MECHANICAL ENGINEERING & CAD SERVICES (MECS) Pty Ltd

MECS
Mechanical Engineering & CAD Services
11 Campbell Place WAGGA NSW 2650
Ph: - 0409 985 816
Email: nick@mecservices.com.au

THIRD ANGLE PROJECTION

WEIGHT: 0.4 0.4 kg

CLIENT

RODDY ENGINEERING
14 Waratah St TUMUT NSW 2720
Ph: - 02 6947 4039
Email: roddyeng.com.au

TITLE: 80NB DOUBLE BOLTED CLAMP HALF

DWG NO. 4229-20-20 | A4

DRAWN N DE BRUYN | DATE 8/12/2025 | SCALE:1:2.5 | SHEET 1 OF 2

PART No.: A209-20-20
DESCRIPTION: 20 MM DOUBLE BOLTED CLAMP HALF
MATERIAL: 304 STAINLESS STEEL
THICKNESS: -
QTY: - REFER TO PURCHASE ORDER