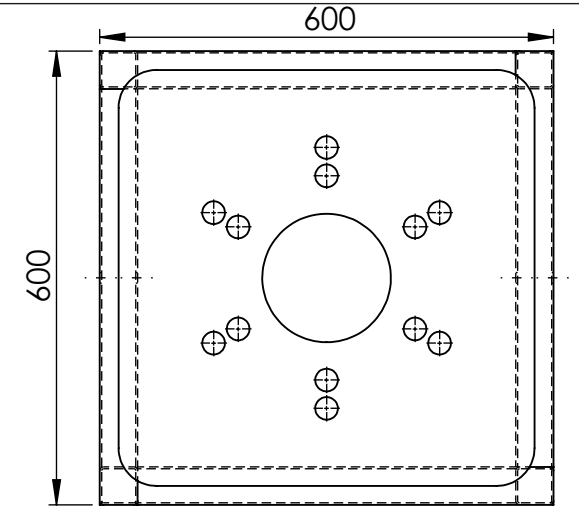

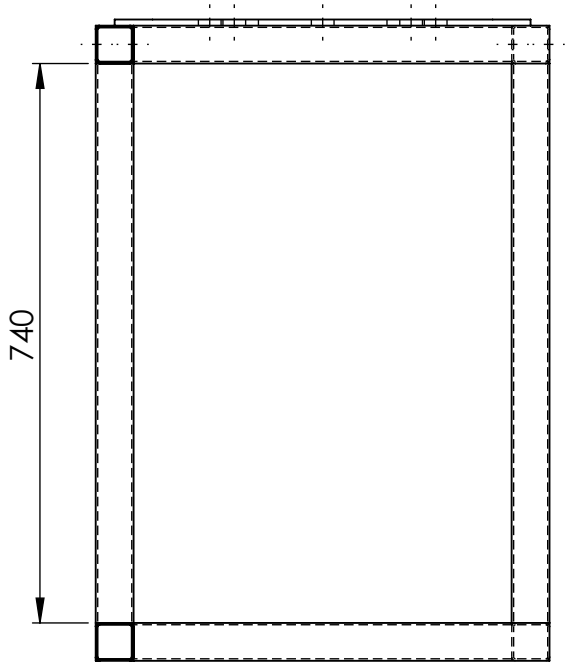

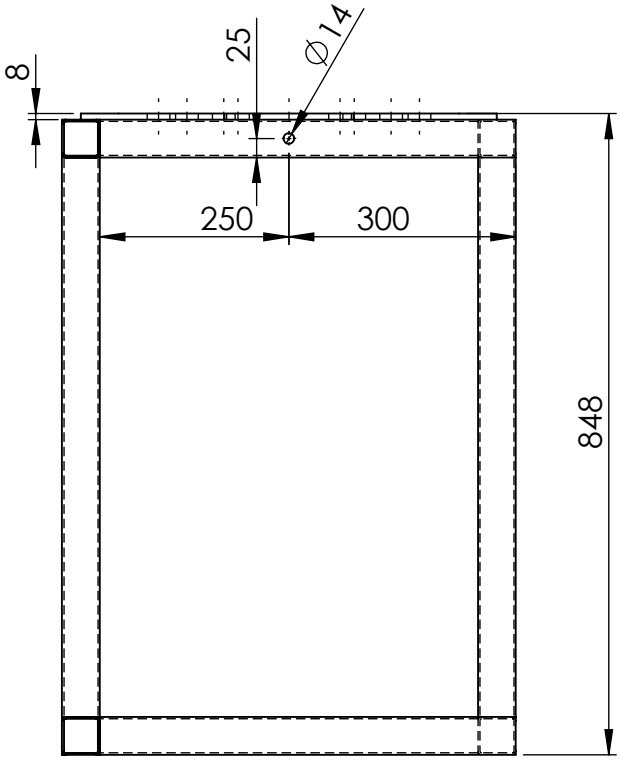

ITEM NO.	DESCRIPTION	LENGTH	QTY	MASS (kg)
1	TOP PLATE		1	17
2	50x50x2.5 SHS	550	2	2
3	50x50x2.5 SHS	740	4	3
4	50x50x2.5 SHS	550	6	2

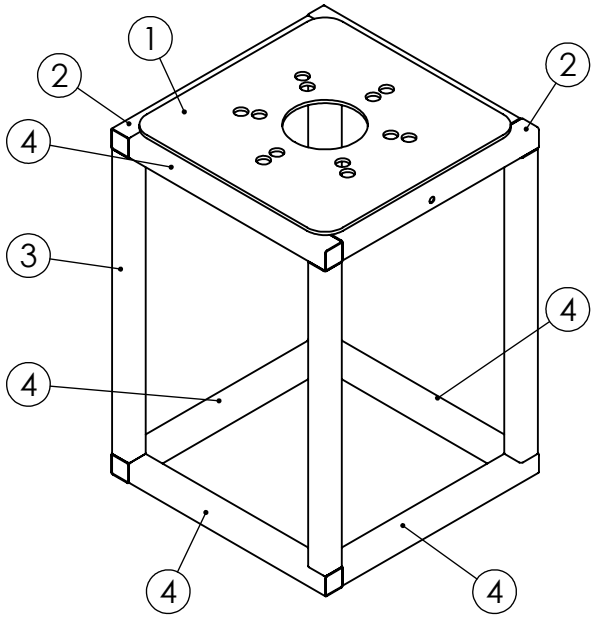

MATERIAL:- MILD STEEL

UNLESS OTHERWISE SPECIFIED: TOLERANCES: MACHINE + / - 0.25mm FABRICATION + / - 1.0 mm

DIMENSIONS IN MILLIMETRES

THIS DRAWING IS THE PROPERTY OF MECHANICAL ENGINEERING & CAD SERVICES (MECS) Pty Ltd & MUST NOT BE MANUFACTURED FROM,COPIED OR TRANSMITTED TO A THIRD PARTY WITHOUT THE PRIOR APPROVAL FROM MECHANICAL ENGINEERING & CAD SERVICES (MECS) Pty Ltd

MECS
Mechanical Engineering & CAD Services
11 Campbell Place WAGGA NSW 2650
Ph: - 0409 985 816
Email: nick@mecservices.com.au

THIRD ANGLE PROJECTION

WEIGHT: 43 kg

CLIENT

RODDY ENGINEERING
14 Waratah St TUMUT NSW 2720
Ph: - 02 6947 4039
Email: roddyeng.com.au

TITLE:

VALVE 2450 & 2452 SCISSOR LIFTING FRAME

DWG NO. J004232-201-1

A4

DRAWN N DE BRUYN DATE 1/10/2025 SCALE:1:10 SHEET 1 OF 2