VALVE PICTORIAL ONLY

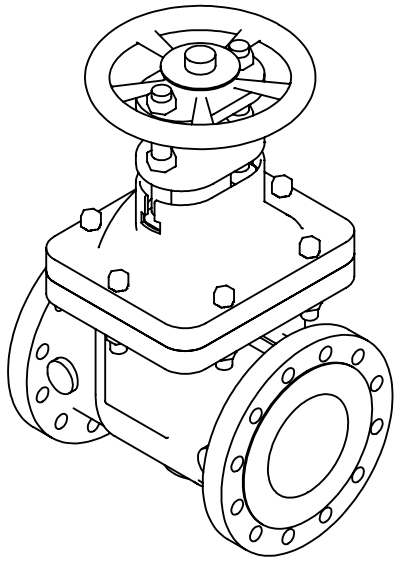

COMPONENTS AND MATERIAL LISTS

NO.	PART NAME	MATERIAL – ASTM	Q'TY
1	BODY	ASTM A351 CF8M+STL	
2	WEDGE	ASTM A351 CF8M	
3	STEM	ASTM A182 F316	
4	NUT	ASTM A194 8M	
5	BOLT	ASTM A193 B8M	
6	GASKET	SS316+FLEXIBLE GRAPHITE	
7	BONNET	ASTM A351 CF8M	
8	PACKING	FLEXIBLE GRAPHITE	
9	PIN	ASTM A276 304	
10	GLAND EYEBOLT	ASTM A193 B8M	
11	NUT	ASTM A194 8M	
12	GLAND FLANGE	ASTM A351 CF8	
13	STEM NUT	COPPER ALLOY	
14	GEAR	ASSEMBLY	

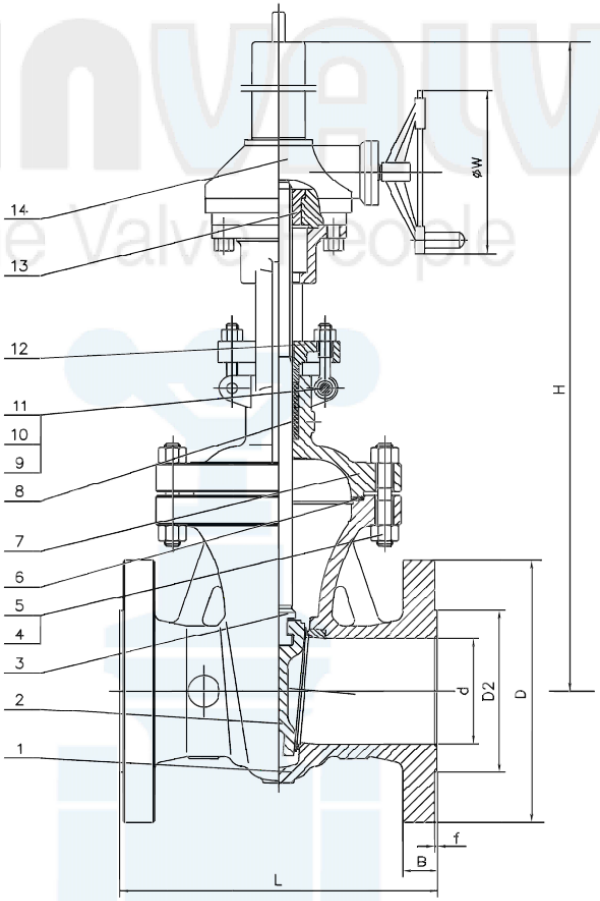

NOTE: FLANGE UNDRILLED

RELEVANT STANDRAD

DESIGN & MFT	API 600
PRE–TEMP. RATING	ASME B16.34
F–F DIMENSION	ASME B16.10
INSPECT & TEST	API 598
ENDS CONNECTION	FLANGED R.F
WAFER DIMENSION	B16.5*B16.5
MARKING	MSS–SP–25
PAINTING	MANUFACTURE STD

TESTING UNIT: MPa

PRESS. RATING	CL300
WATER SHELL	7.7
WATER SEAT	5.7
AIR TEST	0.6
TEMPERATURE	–100~500℃

DIMENSIONS [UNIT: MM]

DN	d	L	D	D2	B	f	W	H
DN150	152	403	320	215.9	37	2.0	310	835

FIG: 7030SSUD ANSI 300 OSY G/O

DRAWED BY: Mr.WILLIAM
CHECKED BY: Mr.ALEXANDER
APPROVED BY: Mr.THOMAS
DATE: JUL.19TH, 2018

SALES DRAWING
API 600 OS&Y R.S B.B GATE VALVE
BODY: A351 CF8M TRIM: SS316
ANSI CL300 RF X ANSI CL300 RF

JOHN VALVES PTY LTD / DWG NO.23417-CL300

MATERIAL:- 316 STAINLESS STEEL

UNLESS OTHERWISE SPECIFIED: TOLERANCES: MACHINE + / - 0.25mm FABRICATION + / - 1.0 mm

DIMENSIONS IN MILLIMETRES

THIS DRAWING IS THE PROPERTY OF MECHANICAL ENGINEERING & CAD SERVICES (MECS) Pty Ltd & MUST NOT BE MANUFACTURED FROM,COPIED OR TRANSMITTED TO A THIRD PARTY WITHOUT THE PRIOR APPROVAL FROM MECHANICAL ENGINEERING & CAD SERVICES (MECS) Pty Ltd

MECS
Mechanical Engineering & CAD Services
11 Campbell Place WAGGA NSW 2650
Ph: - 0409 985 816
Email: nick@mecservices.com.au

THIRD ANGLE PROJECTION

WEIGHT: 183.0349 kg

CLIENT
RODDY ENGINEERING
14 Waratah St TUMUT NSW 2720
Ph: - 02 6947 4039
Email: roddyeng.com.au

TITLE: VALVE 2901A

DWG NO. OEM-2901A-SHL | A4

DRAWN N DE BRUYN | DATE 9/01/2025 | SCALE:1:10 | SHEET 1 OF 2

VALVE PICTORIAL ONLY

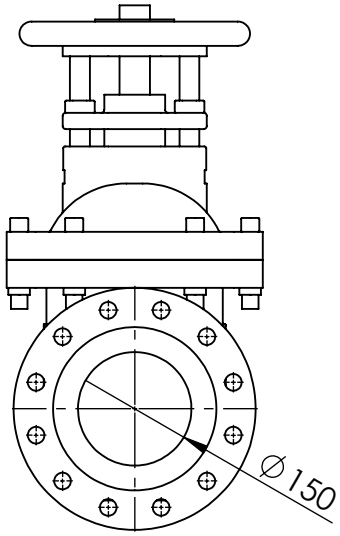

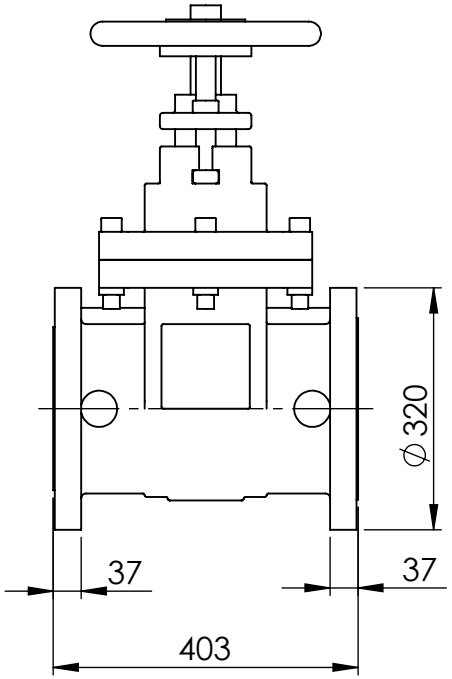

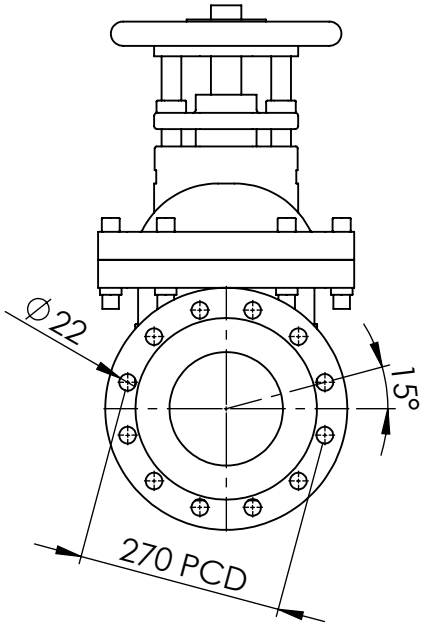

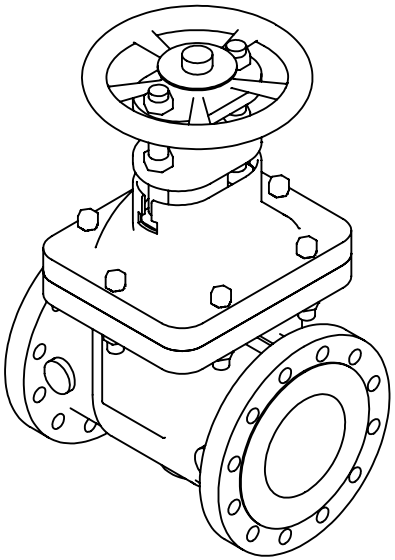

MATERIAL:- 316 STAINLESS STEEL

UNLESS OTHERWISE SPECIFIED: TOLERANCES: MACHINE + / - 0.25mm FABRICATION + / - 1.0 mm

DIMENSIONS IN MILLIMETRES

THIS DRAWING IS THE PROPERTY OF MECHANICAL ENGINEERING & CAD SERVICES (MECS) Pty Ltd & MUST NOT BE MANUFACTURED FROM,COPIED OR TRANSMITTED TO A THIRD PARTY WITHOUT THE PRIOR APPROVAL FROM MECHANICAL ENGINEERING & CAD SERVICES (MECS) Pty Ltd

MECS
Mechanical Engineering & CAD Services
11 Campbell Place WAGGA NSW 2650
Ph: - 0409 985 816
Email: nick@mecservices.com.au

THIRD ANGLE PROJECTION

WEIGHT: 183.0349 kg

CLIENT

RODDY ENGINEERING
14 Waratah St TUMUT NSW 2720
Ph: - 02 6947 4039
Email: roddyeng.com.au

TITLE: VALVE 2901A

DWG NO. OEM-2901A-SHL

A4

DRAWN N DE BRUYN DATE 9/01/2025 SCALE:1:10 SHEET 2 OF 2